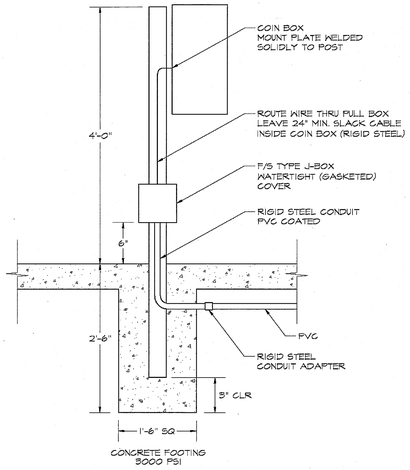

A COIN BOX MOUNTING DETAIL

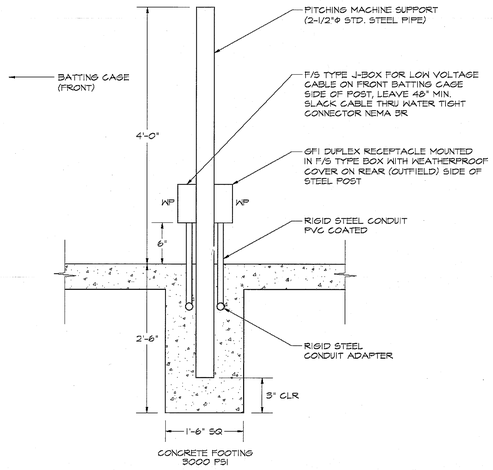

SIDE ELEVATION

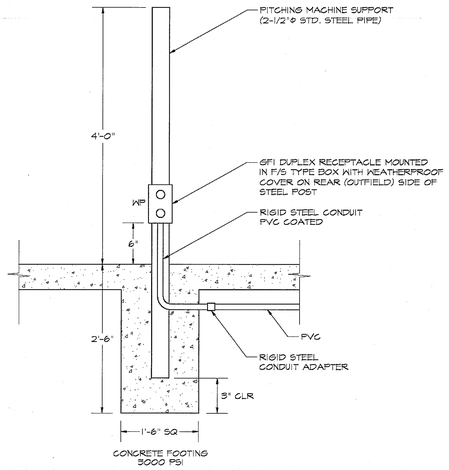

REAR ELEVATION

B PITCHING MACHINE MOUNT

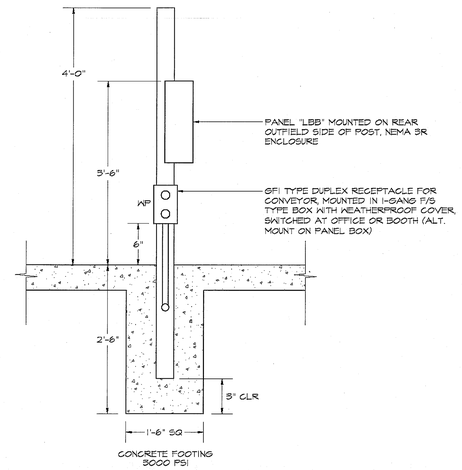

C CONVEYOR POST

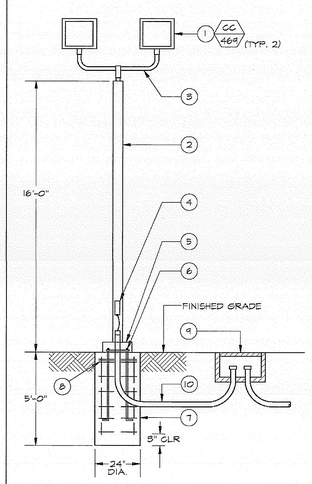

REFERENCE NOTES:

1. 400W MH FLOODLIGHT COMPLETE WITH LAMP AND VISOR. SEE LIGHTING FIXTURE SCHEDULE ON SHEET E-1. AIM LUMINARIES AT NIGHT IN A PATTERN ACCEPTABLE TO THE OWNER.
2. 4" ROUND GALV. STEEL POLE WITH TENON TOP FOR 2" PIPE, 16' HIGH.
3. MOUNTING BRACKET, 2" PIPE COMPLETE WITH FITTINGS.
4. HANDHOLE WITH GROUNDING LUGS AND GASKETED COVER WITH TAMPERPROOF SCREWS.
5. ANCHOR BOLT COVER.
6. 3/4" BASE PLATE WITH (4) 3/4" X 36" X 4" ANCHOR BOLTS WITH 9" BOLT CIRCLE.
7. 24" DIAMETER CONCRETE BASE. 2500 PSI CONCRETE MIX WITH (4) #5 VERTICAL BARS AND #3 TIES AT 12" O.C.
8. PROVIDE 3#3'S IN UPPER 5" AROUND ANCHOR BOLTS.
9. 10 1/2" X 17" X 24"D UNDERGROUND PRECAST CONCRETE PULL BOX WITH BOLTED DOWN TRAFFIC TYPE STEEL COVER MARKED "ELECTRIC". BROOKS #3 1/2 PB SERIES OR APPROVED EQUAL. SET PULL BOX ON 12" COMPACTED ROCK. PROVIDE PULL BOX ADJACENT TO EACH POLE.
10. SCHEDULE 40 PVC CONDUIT. SEE ELECTRICAL SITE PLAN FOR SIZE.

D LIGHT POST

MOORE IACOFANO GOLTSMAN, INC.
801 N. HARBOR BLVD.
FULLERTON, CA 92831
TEL 714/871-3638
FAX 714/871-1188
www.migcom.com

CONSULTANT:

LRA ENGINEERS
Electrical Consulting Engineers
1471 Pomona Road, Unit E
Corona, California 92880
Tel: (951) 737-4669 Fax: (951) 737-6819

PROJECT TEAM:

LANDSCAPE ARCHITECT
MIG INC.

ARCHITECT
PITASSI ARCHITECTS INC.

CIVIL ENGINEERS/SURVEYOR
WALDEN & ASSOCIATES

STRUCTURAL ENGINEERS
CORREIA CONSULTING & DESIGN

ELECTRICAL ENGINEERS
LRA ENGINEERS

IRRIGATION DESIGNER
WILLIAMS IRRIGATION DESIGN

GEOTECHNICAL ENGINEERS
CONVERSE CONSULTANTS

TURF GRASS CONSULTANT
GUISE AND ASSOCIATES

PERRIS VALLEY Big League Dreams

2155 Trumble Road
Perris, California, 92570

SHEET TITLE

BATTING CAGE ELECTRICAL DETAILS

100% CONSTRUCTION DOCUMENT

DATE	REVISIONS

STAMP

REGISTERED PROFESSIONAL ENGINEER
RICHARD C. REGALADO
No. E18914
Exp. 6-30-11
ELECTRICAL
STATE OF CALIFORNIA

CHECKED BY	DATE
LRA	

DATE	FILE NAME
01-07-10	

DRAWN BY	SHEET
CR	E-3.1
JOB NO. 05208.00	
SCALE NONE	308 OF 313 SHEETS