REMOTE MANUAL SWITCHES CABINET IN THE ADMINISTRATION BUILDING 4

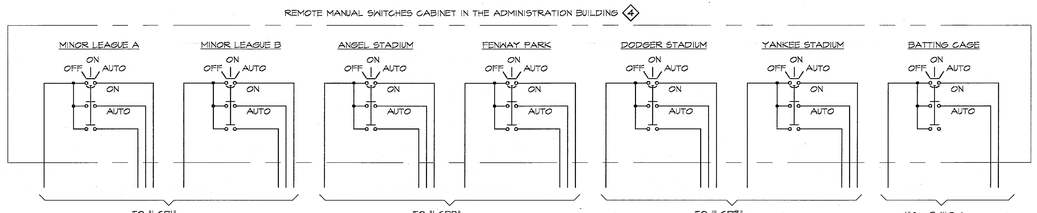

REFERENCE NOTES:

1. MUSCO LIGHTING CONTROL AND MONITORING CABINET COMPLETE WITH LIGHTING CONTACTORS. NEMA TYPE 4 ENCLOSURE. ENTIRE ASSEMBLY SHALL BE FACTORY WIRED, PROGRAMMED AND TESTED.
2. 30A, 3P ELECTRICALLY HELD CONTACTOR 100% RATED, 120V COIL.
3. TO REMOTE MANUAL SWITCHES CABINET IN THE ADMINISTRATION BUILDING.
4. MUSCO REMOTE MANUAL SWITCHES CABINET COMPLETE WITH OFF-ON-AUTO SWITCHES. NEMA TYPE 4, 5052 H32 ALUMINUM ENCLOSURE.
5. OFF-ON-AUTOMATIC SWITCH MOUNTED ON CABINET DOOR. SWITCH SHALL BE FACTORY WIRED TO TERMINAL BLOCKS. PROVIDE SWITCH WITH NAMEPLATE.

NOTES:

1. PROVIDE NAMEPLATES TO IDENTIFY ALL EQUIPMENT IN THE LIGHTING CONTROL PANELS AND REMOTE MANUAL SWITCHES CABINET.
2. LIGHTING CONTROL "ON AND OFF" SCHEDULES SHALL BE AS DIRECTED BY THE COUNTY.

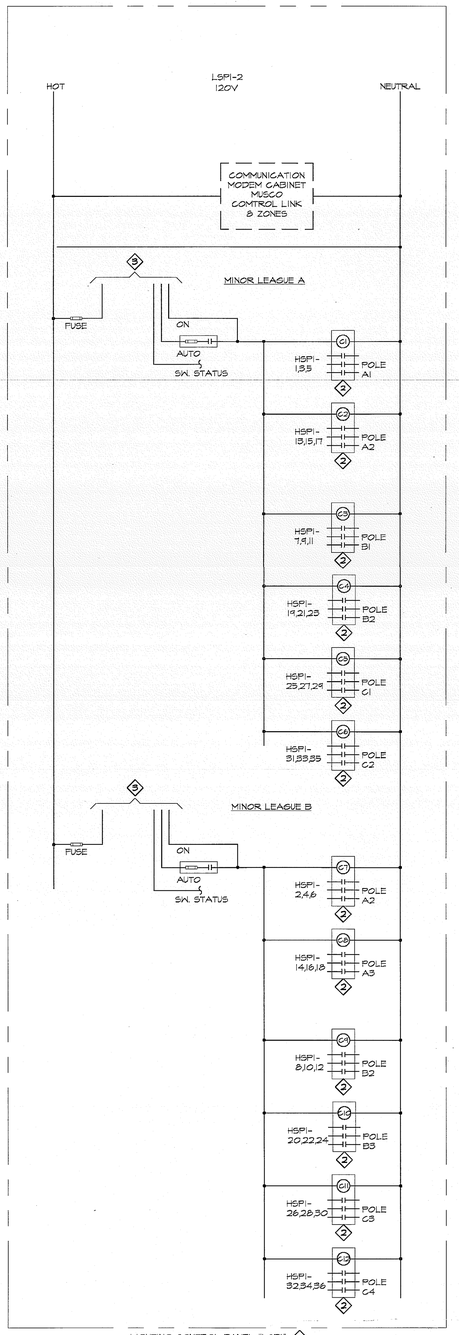

LIGHTING CONTROL PANEL "LCP1" 1
MOUNTED IN MINOR LEAGUE SWITCHBOARD, SEE DETAIL "G" ON SHEET E-5.1

MINOR LEAGUE FIELDS A & B

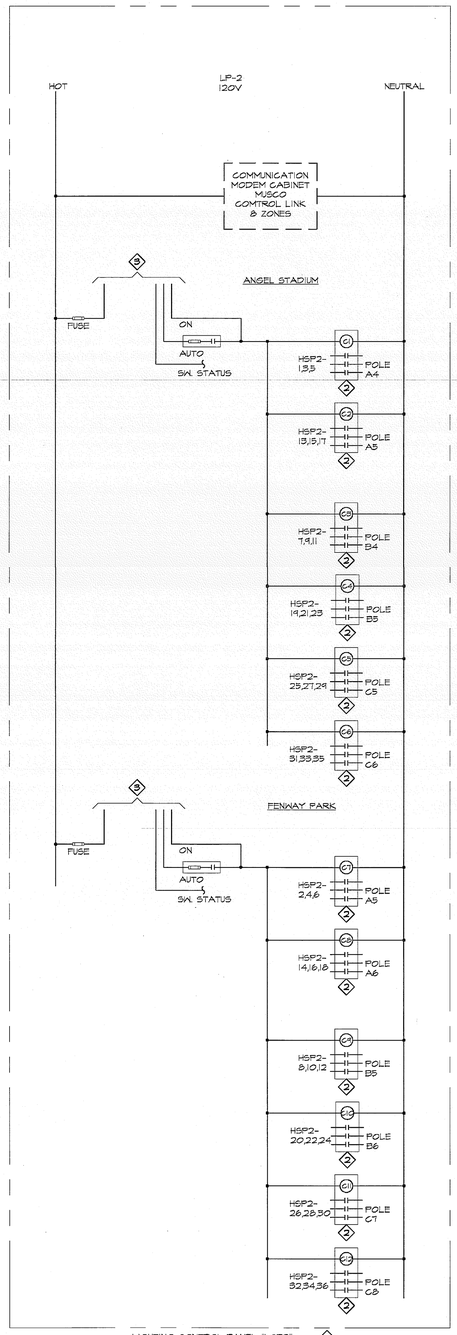

LIGHTING CONTROL PANEL "LCP2" 1
MOUNTED IN MAIN SWITCHBOARD "MSB"
SEE ELEVATION ON SHEET E-0.3

ANGEL STADIUM & FENWAY PARK

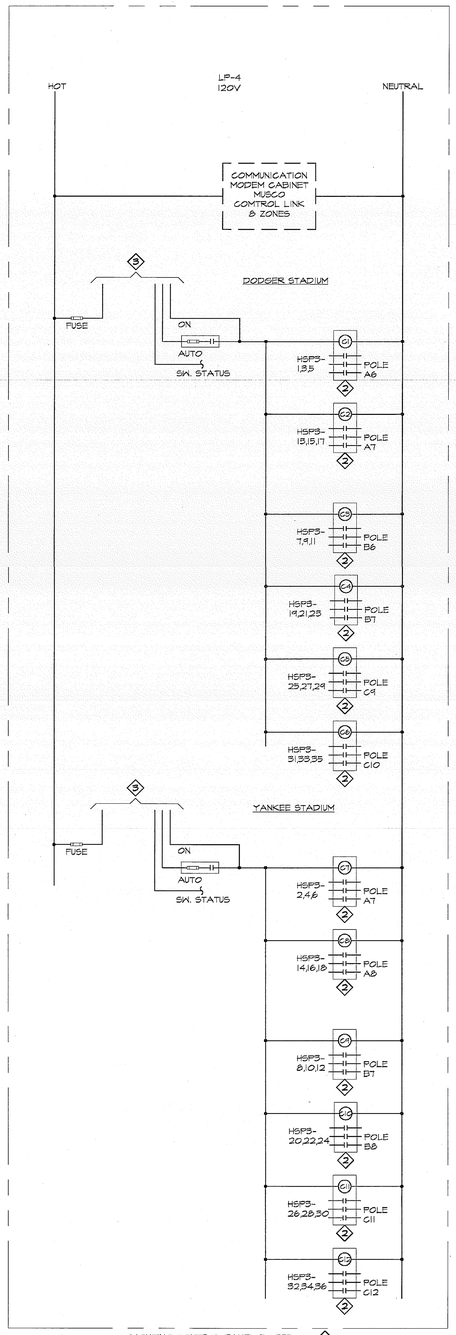

LIGHTING CONTROL PANEL "LCP3" 1
MOUNTED IN MAIN SWITCHBOARD "MSB"
SEE ELEVATION ON SHEET E-0.3

DODGER STADIUM & YANKEE STADIUM

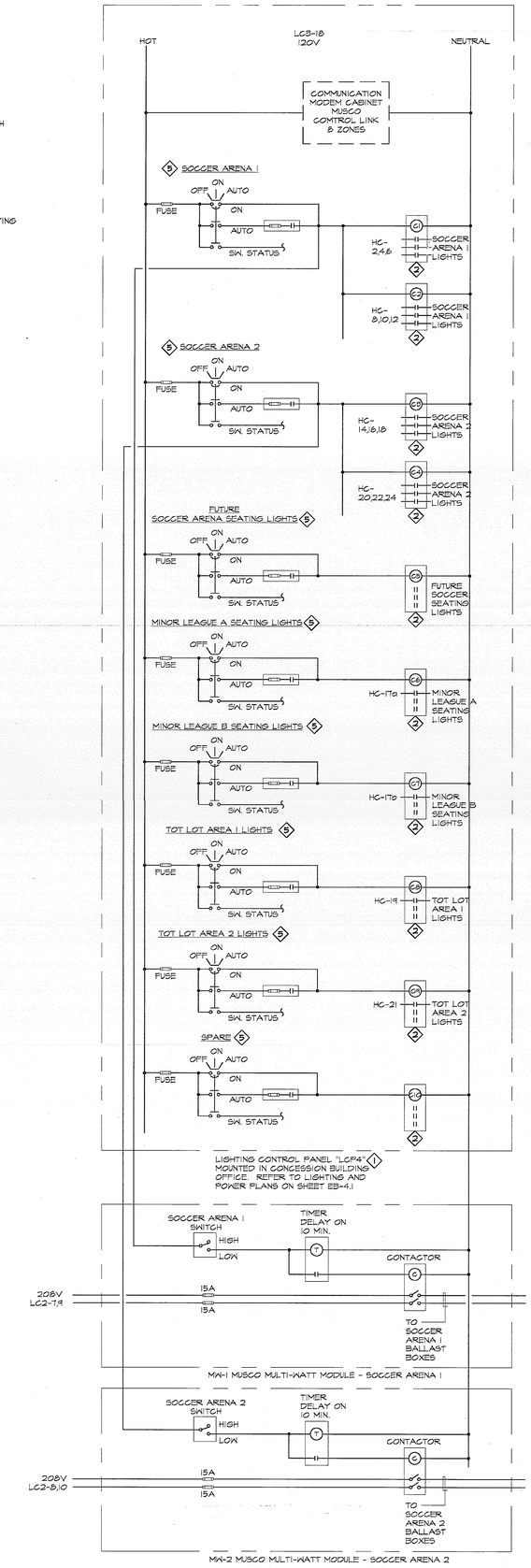

SOCCER ARENA 1 & 2 AND SHADE STRUCTURES

LIGHTING CONTROL DIAGRAMS NOT TO SCALE

MIG

MOORE IACOFANO GOLTSMAN, INC.
801 N. HARBOR BLVD.
FULLERTON, CA 92831
TEL 714/871-3538
FAX 714/871-1188
www.migcom.com

CONSULTANT:

LRA ENGINEERS
Electrical Consulting Engineers
1471 Pomona Road, Unit E
Corona, California 92880
Tel: (951) 737-4669 Fax: (951) 737-5819

PROJECT TEAM:

LANDSCAPE ARCHITECT
MIG INC.

ARCHITECT
PITASSI ARCHITECTS INC.

CIVIL ENGINEERS/SURVEYOR
WALDEN & ASSOCIATES

STRUCTURAL ENGINEERS
CORREIA CONSULTING & DESIGN

ELECTRICAL ENGINEERS
LRA ENGINEERS

IRRIGATION DESIGNER
WILLIAMS IRRIGATION DESIGN

GEOTECHNICAL ENGINEERS
CONVERSE CONSULTANTS

TURF GRASS CONSULTANT
GUISE AND ASSOCIATES

PERRIS VALLEY Big League Dreams

2155 Trumble Road
Perris, California, 92570

SHEET TITLE

LIGHTING CONTROL DIAGRAMS

100% CONSTRUCTION DOCUMENT

DATE	REVISIONS

STAMP

REGISTERED PROFESSIONAL ENGINEER
DAVID C. REGULADO
No. E16914
Exp. 6-30-11
ELECTRICAL
STATE OF CALIFORNIA

CHECKED BY	DATE
LRA	
DATE 01-07-10	FILE NAME
DRAWN BY CR	SHEET E-0.6
JOB NO. 05208.00	293 OF 313 SHEETS
SCALE NONE	