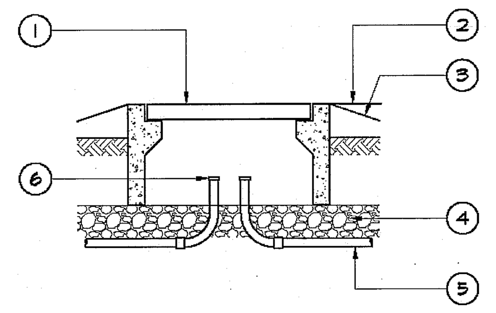

REFERENCE NOTES:

1. PRECAST CONCRETE UNDERGROUND PULL BOX SIZE AS INDICATED ON PLAN
2. 1" ABOVE PAVING OR 6" ABOVE ROUGH GRADE AT LANDSCAPE AREA
3. FINISH SURFACE SHALL SLOPE AWAY FOR POSITIVE DRAINAGE
4. 12" DEEP OF 1" COMPACTED CRUSHED ROCK EXTENDING BEYOND OUTSIDE WALLS OF THE PULL BOX
5. PVC CONDUIT, SIZE AND QUANTITY AS NOTED ON PLANS
6. CONDUITS MUST BE SEALED AFTER PULLING WIRES (TYP.)

NOTES:

1. ALL SPLICES IN PULL BOXES SHALL BE WITH SCOTCHCAST 400 ELECTRICAL INSULATING RESIN, OR TWO LAYERS OF RUBBER TAPE WITH TWO LAYERS OF BLACK SCOTCH 88 TAPE AND TWO COATS OF SCOTCHCOAT WATERPROOF RESIN. CONTRACTOR MAY ELECT TO USE SPLICE KITS AND CONNECTORS APPROVED FOR UNDERGROUND APPLICATIONS. SUBMIT SHOP DRAWINGS FOR APPROVAL.
2. PROVIDE AND INSTALL PULL BOX AS INDICATED ON THE DRAWINGS.

A — TYPICAL UNDERGROUND PULL BOX DETAIL
NOT TO SCALE

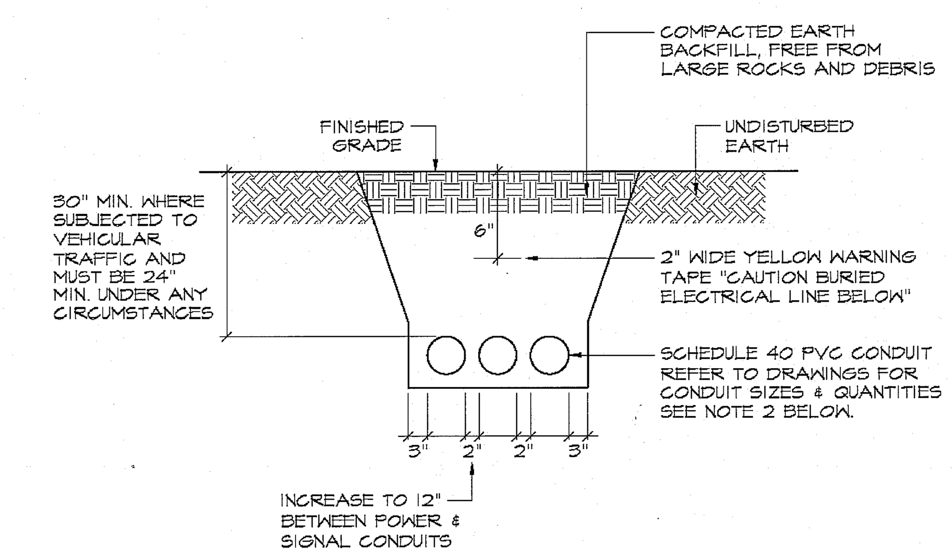

NOTES:

1. REFER TO POWER/TELEPHONE CO. DRAWINGS FOR UNDERGROUND CONDUIT REQUIREMENTS.

B — TYPICAL UNDERGROUND CONDUIT SECTION
NOT TO SCALE

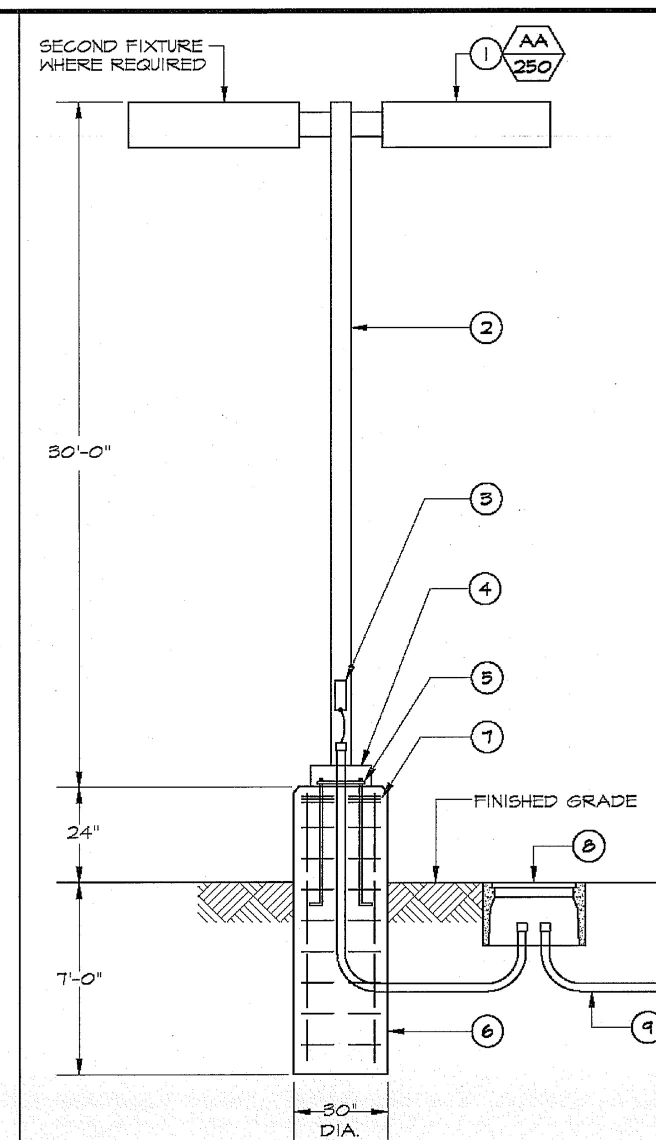

REFERENCE NOTES:

1. (2 LAMP) 90W LOW PRESSURE SODIUM LIGHT FIXTURE, SEE LIGHTING FIXTURE SCHEDULE ON SHEET E-0.1.
2. 5" SQUARE STRAIGHT STEEL POLE.
3. HANDHOLE WITH GROUNDING LUGS AND GASKETED COVER WITH TAMPERPROOF SCREWS.
4. ANCHOR BOLT COVER.
5. 3/4" BASE PLATE WITH (4) 1" x 36" ANCHOR BOLTS AND 11 1/2" BOLT CIRCLE.
6. 30" DIAMETER CONCRETE BASE. 2500 PSI CONC. MIX WITH (4) #5 VERTICAL BARS AND #3 TIES AT 12" O.C. FORMED IN SONOTUBE.
7. 3 #3 TIES IN UPPER 5" AROUND ANCHOR BOLTS.
8. UNDERGROUND PRECAST CONCRETE PULL BOX. PROVIDE PULL BOX ADJACENT TO EACH POLE. SEE ELECTRICAL SITE LIGHTING PLANS.
9. SCHEDULE 40 PVC CONDUIT. SEE ELECTRICAL SITE PLAN FOR SIZE.

NOT TO SCALE

C — TYPICAL PARKING AREA LIGHT AND POLE STANDARD DETAIL

SYMBOLS ON SITE PLAN:

V — INDICATES DISTRIBUTION TYPE: USE TYPE II DISTRIBUTION UNLESS NOTED OTHERWISE WITH TYPE V DISTRIBUTION

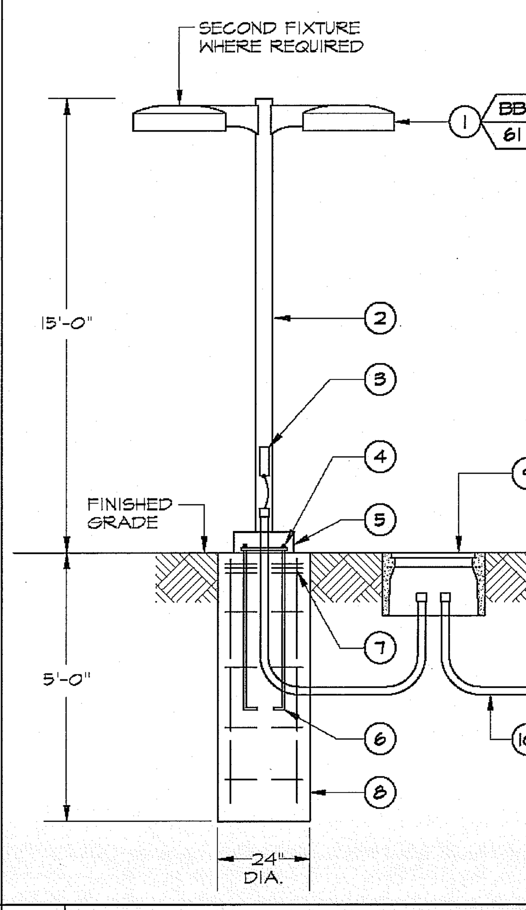

REFERENCE NOTES:

1. (1 LAMP) 50W HPS SECURITY LIGHTING FIXTURE, SEE LIGHTING FIXTURE SCHEDULE ON SHEET E-0.1.
2. 4" DIA. ROUND STRAIGHT STEEL POLE WITH FINISH TO MATCH FIXTURE.
3. HANDHOLE WITH GROUNDING LUGS AND GASKETED COVER WITH TAMPERPROOF SCREWS.
4. PROVIDE 2 NUTS FOR EACH ANCHOR BOLT FOR LEVELLING.
5. ANCHOR BOLT COVER.
6. 3/4" BASE PLATE WITH FOUR (4) ANCHOR BOLTS AND 9" BOLT CIRCLE BY POLE MANUFACTURER.
7. 3 #3 TIES IN UPPER 5" AROUND ANCHOR BOLTS.
8. REINFORCED CONCRETE FOOTING WITH 4 #4 VERT. BARS AND #3 HORIZONTAL TIES @ 12" O.C. MAX. 2500 PSI CONC. MIX.
9. UNDERGROUND PRECAST CONCRETE PULL BOX. PROVIDE PULL BOX ADJACENT TO EACH POLE. SEE ELECTRICAL SITE LIGHTING PLANS.
10. SCHEDULE 40 PVC CONDUIT. SEE ELECTRICAL SITE PLAN FOR SIZE.

D — TYPICAL SECURITY LIGHT AND POLE STANDARD DETAIL
NOT TO SCALE

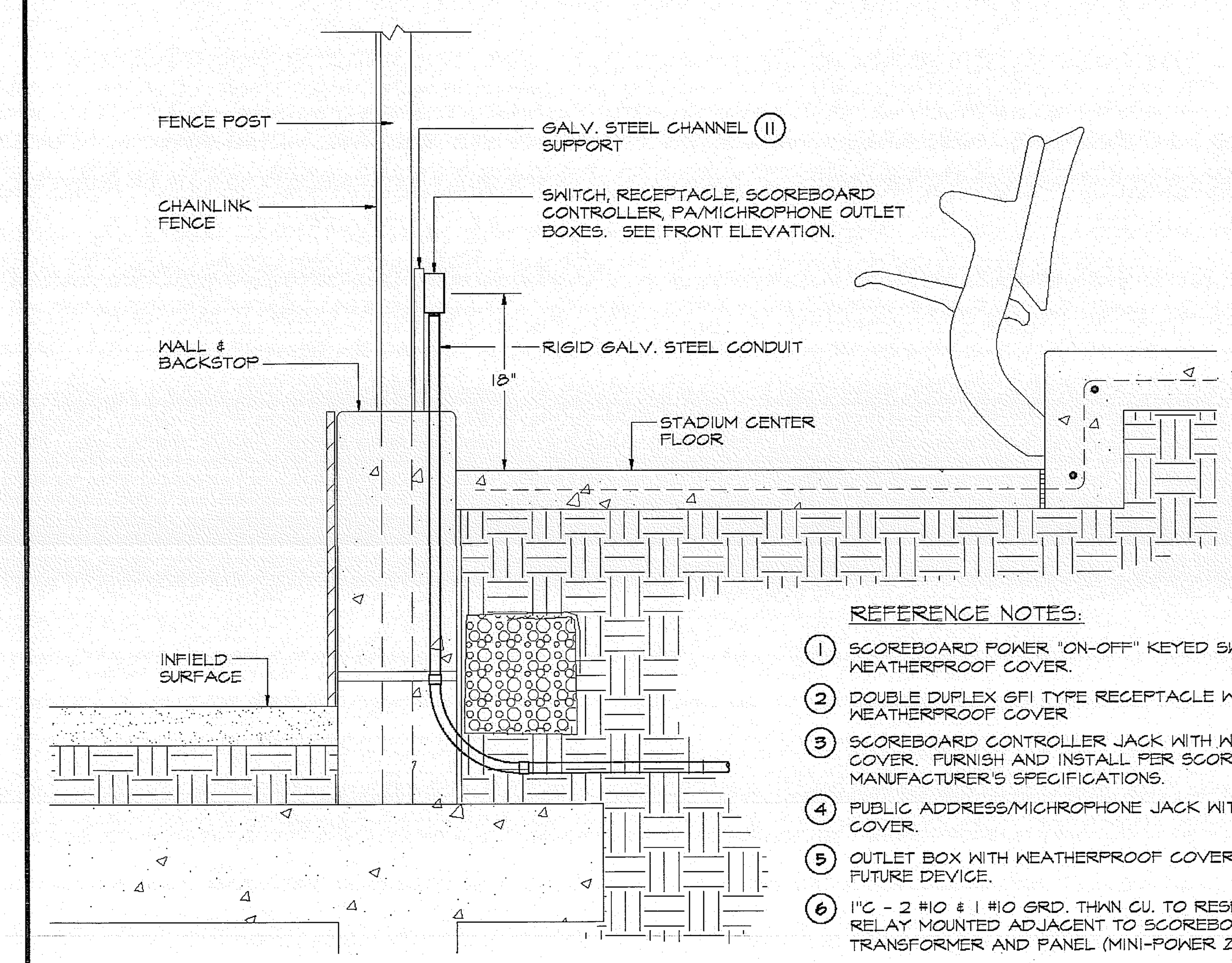

SECTION

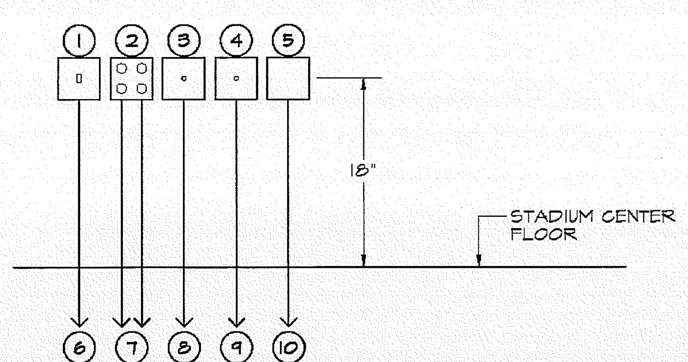

FRONT ELEVATION

REFERENCE NOTES:

1. SCOREBOARD POWER "ON-OFF" KEYED SWITCH WITH WEATHERPROOF COVER.
2. DOUBLE DUPLEX GFI TYPE RECEPTACLE WITH WEATHERPROOF COVER
3. SCOREBOARD CONTROLLER JACK WITH WEATHERPROOF COVER. FURNISH AND INSTALL PER SCOREBOARD MANUFACTURER'S SPECIFICATIONS.
4. PUBLIC ADDRESS/MICHROPHONE JACK WITH WEATHERPROOF COVER.
5. OUTLET BOX WITH WEATHERPROOF COVER FOR FUTURE DEVICE.
6. 1"C - 2 #10 & 1 #10 GRD. THWN CU. TO RESPECTIVE CONTROL RELAY MOUNTED ADJACENT TO SCOREBOARD COMBINATION TRANSFORMER AND PANEL (MINI-POWER ZONE).
7. SEE ELECTRICAL SITE POWER PLANS FOR CONDUIT AND WIRING REQUIREMENTS
8. 1"C WITH CONTROL CABLE TO SCOREBOARD. CONTROL CABLE PER SCOREBOARD MANUFACTURER'S SPECIFICATIONS.
9. 3/4"C W/MICROPHONE CABLE TO TELEPHONE/SIGNAL BACKBOARD. REPLICA FIELDS - TO "TS-SC" AT STADIUM CLUB BUILDING. MINOR LEAGUE FIELDS - TO "TS-C" AT CONCESSION BUILDING.
10. 3/4"C.O. TO TELEPHONE/SIGNAL BACKBOARD. REPLICA FIELDS - TO "TS-SC" AT STADIUM CLUB BUILDING. MINOR LEAGUE FIELDS - TO "TS-C" AT CONCESSION BUILDING.
11. FURNISH AND INSTALL GALV. STEEL CHANNELS TO SUPPORT OUTLET BOXES AND CONDUIT.

NOTES:

1. OUTLET BOXES SHALL BE CAST TYPE, TWO GANG, WEATHERPROOF, SURFACE MOUNTED WITH WEATHERPROOF COVER.

E — TYPICAL SCOREBOARD CONTROLLER RECEPTACLE, JACK & P.A. OUTLET
NOT TO SCALE

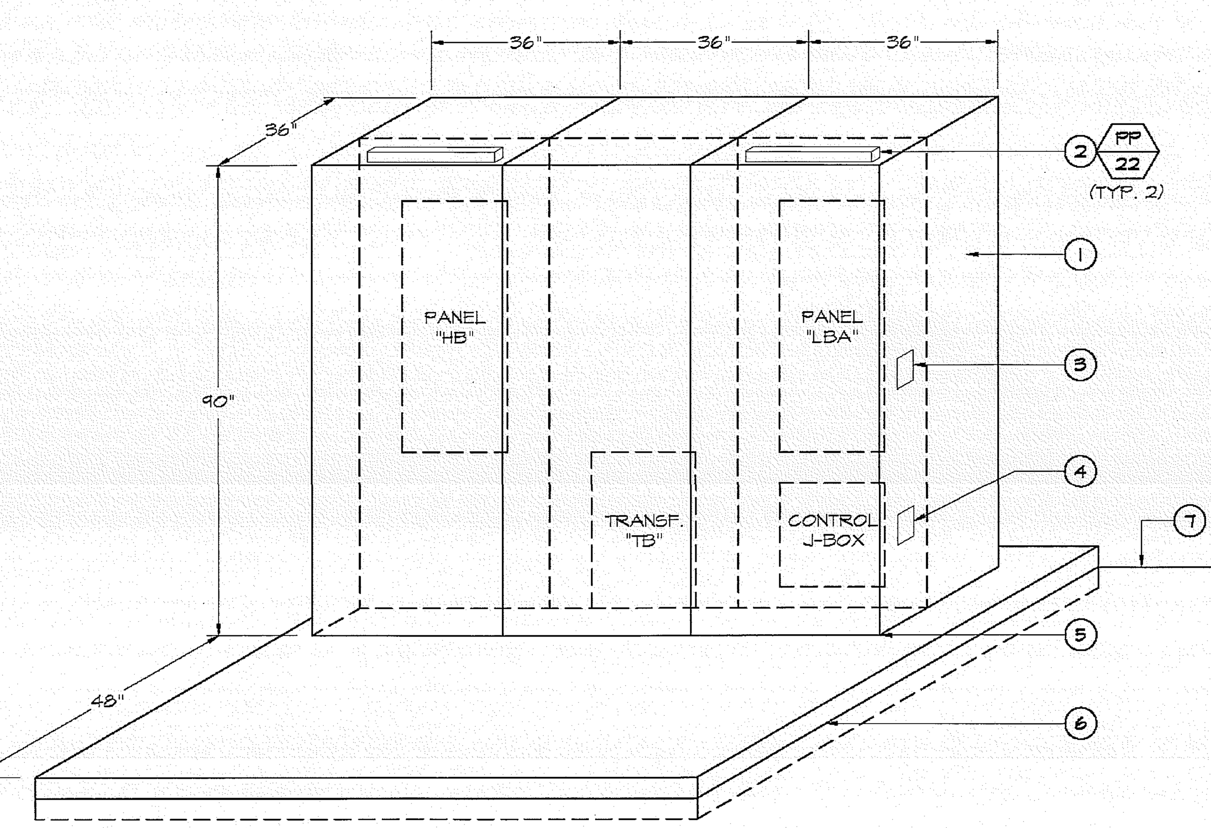

SWITCHBOARD NOTES

1. NEMA 3R ENCLOSURE. NON-WALK IN TYPE
2. 2 FT. FLUORESCENT LIGHTING FIXTURE. LIGHT FIXTURE SHALL BE MOUNTED INSIDE THE SWITCHBOARD HOUSING. PROVIDE BRANCH CIRCUIT CONDUIT AND WIRES AND CONNECT TO PANEL "LBA", CIRCUIT 2. SEE LIGHTING FIXTURE SCHEDULE ON SHEET E-0.1.
3. SINGLE POLE TOGGLE SWITCH FOR SWITCHBOARD LIGHT MOUNTED INSIDE THE SWITCHBOARD HOUSING
4. GFI TYPE RECEPTACLE. PROVIDE BRANCH CIRCUIT CONDUIT AND WIRES AND CONNECT TO PANEL "LBA", CIRCUIT 4.
5. PROVIDE 5/8" DIA. WEDGE ANCHORS, MINIMUM 3 1/4" EMBEDMENT. PROVIDE A MINIMUM OF 8 ANCHORS PER SWITCHBOARD SECTION
6. CAST IN PLACE 8" THICK CONCRETE PAD WITH 6"X6", #10X#10 WELDED WIRE MESH (4" ABOVE GRADE AND 4" BELOW FINISH GRADE) EXTEND 6" BEYOND OUTSIDE DIMENSION OF ENCLOSURE WITH MINIMUM 1.2% SLOPE AWAY FROM ENCLOSURE FOR DRAINAGE.
7. FINISH GRADE

F — BATTING CAGE SWITCHBOARD DETAIL
NOT TO SCALE

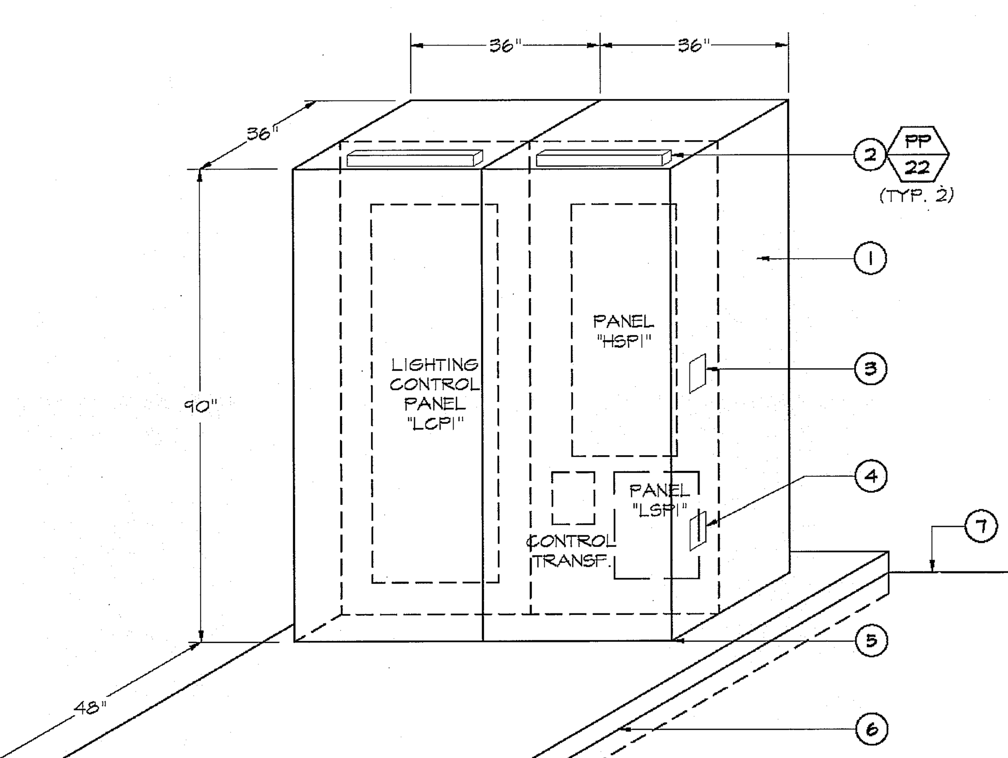

SWITCHBOARD NOTES

1. NEMA 3R ENCLOSURE. NON-WALK IN TYPE
2. 2 FT. FLUORESCENT LIGHTING FIXTURE. LIGHT FIXTURE SHALL BE MOUNTED INSIDE THE SWITCHBOARD HOUSING. PROVIDE BRANCH CIRCUIT CONDUIT AND WIRES AND CONNECT TO PANEL "LSP1", CIRCUIT 1. SEE LIGHTING FIXTURE SCHEDULE ON SHEET E-0.1.
3. SINGLE POLE TOGGLE SWITCH FOR SWITCHBOARD LIGHT MOUNTED INSIDE THE SWITCHBOARD HOUSING
4. GFI TYPE RECEPTACLE. PROVIDE BRANCH CIRCUIT CONDUIT AND WIRES AND CONNECT TO PANEL "LSP1", CIRCUIT 3.
5. PROVIDE 5/8" DIA. WEDGE ANCHORS, MINIMUM 3 1/4" EMBEDMENT. PROVIDE A MINIMUM OF 8 ANCHORS PER SWITCHBOARD SECTION
6. CAST IN PLACE 8" THICK CONCRETE PAD WITH 6"X6", #10X#10 WELDED WIRE MESH (4" ABOVE GRADE AND 4" BELOW FINISH GRADE) EXTEND 6" BEYOND OUTSIDE DIMENSION OF ENCLOSURE WITH MINIMUM 1.2% SLOPE AWAY FROM ENCLOSURE FOR DRAINAGE.
7. FINISH GRADE

G — MINOR LEAGUE FIELDS A & B SWITCHBOARD DETAIL
NOT TO SCALE

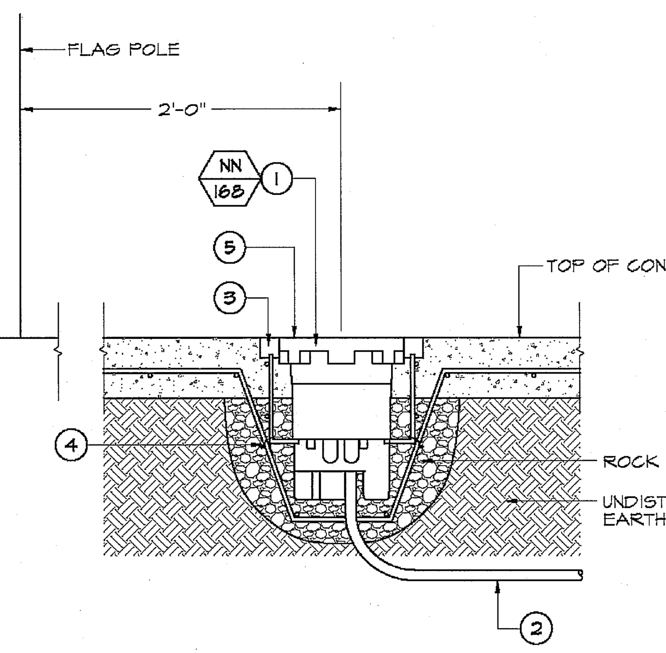

REFERENCE NOTES:

1. METAL HALIDE LIGHTING FIXTURE, SEE LIGHTING FIXTURE SCHEDULE ON SHEET E-0.1.
2. SCHEDULE 40 PVC CONDUIT, SEE ELECTRICAL SITE PLAN FOR WIRING REQUIREMENTS.
3. 2" GROUT SPACE FOR FINISHING.
4. TIE GROUT MASK TO REBAR FOR SUPPORT.
5. TOP OF LENS RING FLUSH WITH TOP OF CONCRETE SLAB.

H — TYPICAL FLAG POLE UP-LIGHT MOUNTING DETAIL
NOT TO SCALE

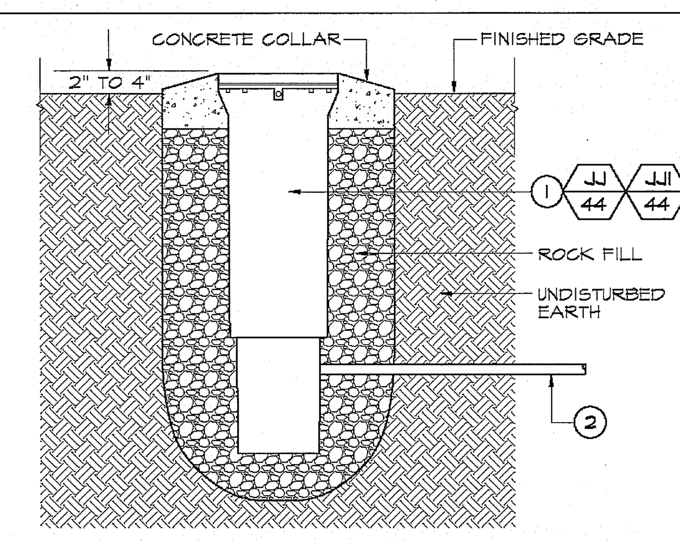

REFERENCE NOTES:

1. METAL HALIDE LIGHTING FIXTURE, SEE LIGHTING FIXTURE SCHEDULE ON SHEET E-0.1.
2. SCHEDULE 40 PVC CONDUIT, SEE ELECTRICAL SITE PLAN FOR WIRING REQUIREMENTS.

I — TYP. MONUMENT SIGN/TREE UP-LIGHT MOUNTING DETAIL
NOT TO SCALE

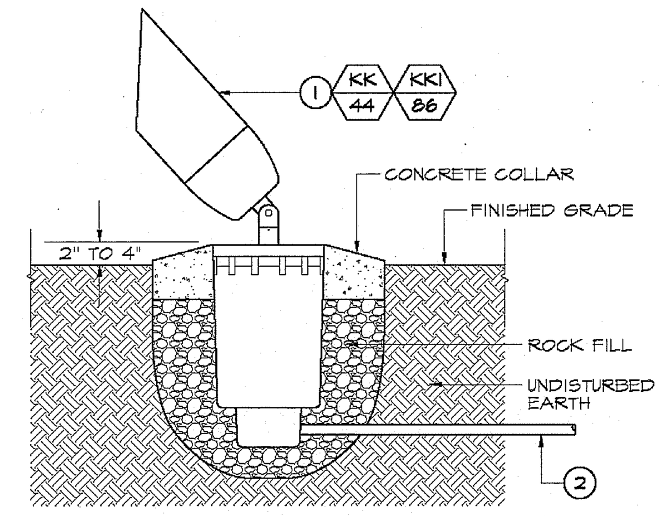

REFERENCE NOTES:

1. METAL HALIDE LIGHTING FIXTURE, SEE LIGHTING FIXTURE SCHEDULE ON SHEET E-0.1.
2. SCHEDULE 40 PVC CONDUIT, SEE ELECTRICAL SITE PLAN FOR WIRING REQUIREMENTS.

J — TYPICAL MONUMENT SIGN UP-LIGHT MOUNTING DETAIL
NOT TO SCALE

M I G

MOORE IACOFANO GOLTSMAN, INC.
801 N. HARBOR BLVD.
FULLERTON, CA 92831
TEL 714/871-3638
FAX 714/871-1188
www.migcom.com

CONSULTANT:

LRA ENGINEERS
Electrical Consulting Engineers
1471 Pomona Road, Unit E
Corona, California 92880
Tel: (951) 737-4569 Fax: (951) 737-5619

PROJECT TEAM:
LANDSCAPE ARCHITECT
MIG INC.
ARCHITECT
PITASSI ARCHITECTS INC.
CIVIL ENGINEERS/SURVEYOR
WALDEN & ASSOCIATES
STRUCTURAL ENGINEERS
CORREIA CONSULTING & DESIGN
ELECTRICAL ENGINEERS
LRA ENGINEERS
IRRIGATION DESIGNER
WILLIAMS IRRIGATION DESIGN
GEOTECHNICAL ENGINEERS
CONVERSE CONSULTANTS
TURF GRASS CONSULTANT
GUISE AND ASSOCIATES

PERRIS VALLEY Big League Dreams

2155 Trumble Road
Perris, California, 92570

SHEET TITLE

ELECTRICAL DETAILS

100% CONSTRUCTION DOCUMENT

DATE	REVISIONS

STAMP

REGISTERED PROFESSIONAL ENGINEER
CIRILO C. REGALADO JR.
No. E16914
Exp. 6-30-11
ELECTRICAL
STATE OF CALIFORNIA

CHECKED BY	DATE
LRA	

DATE: 01-07-10
FILE NAME:
DRAWN BY: CR
JOB NO.: 05208.00
SCALE: NONE
SHEET: E-5.1
313 OF 313 SHEETS