LIGHTING FIXTURE NOTES

1. THIS CONTRACTOR SHALL VERIFY THE TYPE OF CEILING BEFORE ORDERING ANY NEW FIXTURES. HE IS FULLY RESPONSIBLE TO PROVIDE ALL MOUNTING BRACKETS TO FIT THE CEILING CONDITIONS AT NO EXTRA CHARGE TO THE OWNER.
2. REFER TO ARCHITECTURAL REFLECTED CEILING PLAN FOR EXACT LOCATION OF LIGHTING FIXTURES.
3. CONTRACTOR SHALL BE RESPONSIBLE FOR ORDERING PROPER TYPES OF TRIMS ALL RECESSED FLUORESCENT FIXTURES TO FIT THE CEILING BEING INSTALLED.
4. ALL NEW FLUORESCENT LAMPS SHALL BE ENERGY SAVING TYPE, COOL WHITE EQUAL TO G.E. - "WATTMISER 2", OR SYLVANIA - "SUPER SAVER" LAMPS.
5. ALL BALLASTS SHALL BE HIGH FREQUENCY ELECTRONIC TYPE SUITABLE FOR LAMPS SPECIFIED. 97% BALLAST FACTOR MINIMUM AND TRANSIENT HARMONIC DISTORTION OF LESS THAN 10 PERCENT.
6. ALL LUMINAIRES/BALLASTS SHALL BE CERTIFIED BY THE CALIFORNIA ENERGY COMMISSION.
7. FIXTURE TYPE IN CONTACT WITH INSULATION SHALL BE U.L. APPROVED FOR THERMAL BARRIER.
8. SUBMIT LIGHTING FIXTURE CUTS FOR OWNER/ARCHITECT OR ENGINEER'S APPROVAL.
9. ALL EXTERIOR LIGHTING FIXTURES SHALL HAVE THE APPROPRIATE DAMP OR WET LOCATION LABELS PER N.E.C. 410-4.

LIGHTING MANDATORY MEASURES

☒ FLUORESCENT BALLAST AND LUMINAIRES CERTIFIED

ALL FLUORESCENT FIXTURES SPECIFIED FOR THE PROJECT SHALL BE CERTIFIED AND LISTED IN THE DIRECTORY. ALL INSTALLED FIXTURES SHALL BE CERTIFIED.

☒ INDIVIDUAL ROOM/AREA CONTROLS

EACH ROOM AND AREA IN THIS BUILDING IS EQUIPPED WITH A SEPARATE SWITCH OR OCCUPANCY SENSOR DEVICES FOR EACH AREA WITH FLOOR-TO-CEILING WALLS.

☒ UNIFORM REDUCTION FOR INDIVIDUAL ROOMS

ALL ROOMS AND AREA GREATER THAN 100 SQUARE FEET AND MORE THAN 0.8 WATTS PER SQUARE FOOT OF LIGHTING LOAD SHALL BE CONTROLLED WITH BI-LEVEL SWITCHING FOR UNIFORM REDUCTION OF LIGHTING WITHIN THE ROOM.

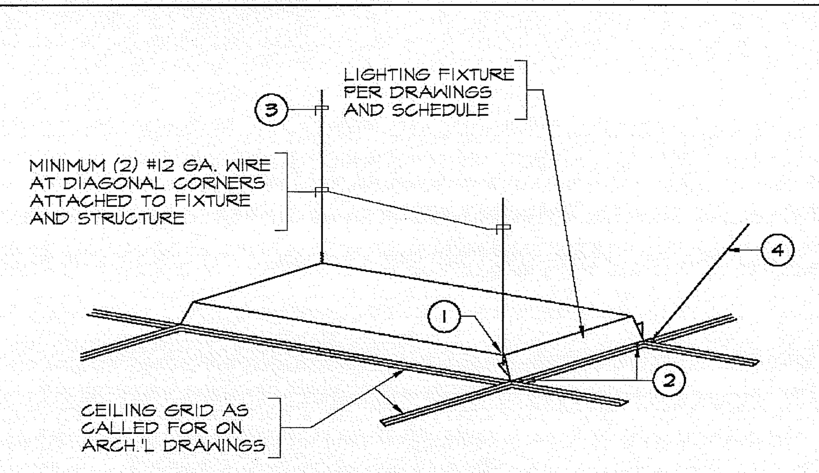

NOTES:

1. ATTACH WIRE TO FIXTURE (3 TIGHT TURNS MIN. IN 1 1/2" MAX.).
2. SEISMIC RESTRAINT CLIP, MINIMUM (2) PER LIGHT FIXTURE.
3. ATTACH HANGER WIRES TO STRUCTURE AS PER STRUCTURAL & ARCHITECTURAL DETAILS.
4. CEILING SYSTEM SPLAY/HANGER WIRES AS IT OCCURS, SEE PLANS.

RECESSED LAY-IN FIXTURE MOUNTING DETAIL   NOT TO SCALE

LIGHTING FIXTURE SCHEDULE - BUILDINGS

TYPE	FIXTURE INCAND.	FIXTURE FLUOR.	FIXTURE H.I.D.	FIXTURE LED	VOLTS	LAMPS NO.	LAMPS WATTS AND TYPE	MOUNTING REC.	MOUNTING CLG.	MOUNTING PEND.	MOUNTING WALL	DESCRIPTION & VARIATIONS	MANUFACTURER & CATALOG NUMBER (OR APPROVED EQUAL)
A / 83		•			277	3	32W F32T8 41K	•				2' X 4' REC. GRID TROFFER WITH PRISMATIC LENS AND 1-2 LAMP & 1-1 LAMP INSTANT START ELECTRONIC BALLASTS	H.E. WILLIAMS # 50G-S24-332-FA12125-EB2/1-UNV
AX / 83		•			277	3	32W F32T8 41K	•				SAME AS TYPE "A" EXCEPT WITH EMERGENCY BATTERY UNIT (1400 LUMENS BATTERY MINIMUM)	H.E. WILLIAMS # 50G-S24-332-FA12125-EM5/2-EB2/1-UNV
A1 / 83		•			277	3	32W F32T8 41K	•				2' X 4' REC. GRID TROFFER WITH PRISMATIC LENS AND 1-2 LAMP & 1-1 LAMP INSTANT START ELECTRONIC BALLASTS, WITH LENS GASKETING	H.E. WILLIAMS # 50G-S24-332-FA12125-DG-EB2/1-UNV
A1X / 83		•			277	3	32W F32T8 41K	•				SAME AS TYPE "A1" EXCEPT WITH EMERGENCY BATTERY UNIT (1400 LUMENS BATTERY MINIMUM)	H.E. WILLIAMS # 50G-S24-332-FA12125-DG-EM5/2-EB2/1-UNV
A2 / 54		•			277	2	32W F32T8 41K	•				2' X 4' REC. GRID TROFFER WITH PRISMATIC LENS & INSTANT START ELECTRONIC BALLAST	H.E. WILLIAMS # 50G-S24-232-FA12125-EB2-UNV
A2X / 54		•			277	2	32W F32T8 41K	•				SAME AS TYPE "A2" EXCEPT W/ EMERGENCY BATTERY UNIT (1400 LUMENS BATTERY MINIMUM)	H.E. WILLIAMS # 50G-S24-232-FA12125-EM5/2-EB2-UNV
B / 83		•			277	3	32W F32T8 41K		•			2' X 4' SURFACE MTD. FLUOR. WITH PRISMATIC LENS AND 1-2 LAMP & 1-1 LAMP INSTANT START ELECTRONIC BALLASTS, WITH LENS GASKETING	H.E. WILLIAMS # 12-4-332-FA12125-DG-EB2/1-UNV
BX / 83		•			277	3	32W F32T8 41K		•			SAME AS TYPE "B" EXCEPT WITH EMERGENCY BATTERY UNIT (1400 LUMENS BATTERY MINIMUM)	H.E. WILLIAMS # 12-4-332-FA12125-DG-EM5/2-EB2/1-UNV
C / 54		•			277	2	32W F32T8 41K		•			4' SURFACE MTD. WRAPAROUND FLUORESCENT FIXTURE WITH PRISMATIC LENS AND INSTANT START ELECTRONIC BALLAST	H.E. WILLIAMS # 35-4-232-1-EB2-UNV
C1 / 32		•			277	1	32W F32T8 41K		•			4' SURFACE MTD. WRAPAROUND FLUORESCENT FIXTURE WITH PRISMATIC LENS AND INSTANT START ELECTRONIC BALLAST	H.E. WILLIAMS # 20-4-132-A-EB1-UNV
D / 35		•			277	1	32W TRT 41K	•				6" APER. RECESSED COMPACT FLUORESCENT DOWNLIGHT WITH CLEAR REFLECTOR AND ELECTRONIC BALLAST	JUNO LIGHTING GROUP # C6H-132T-C600-CL
DX / 35		•			277	1	32W TRT 41K	•				SAME AS TYPE "D" EXCEPT WITH EMERGENCY BATTERY UNIT	JUNO LIGHTING GROUP # C6H-132T-BN-C600-CL-BN
E / 28		•			277	1	26W TRT 41K	•				4" APER. RECESSED COMPACT FLUORESCENT DOWNLIGHT WITH CLEAR REFLECTOR AND ELECTRONIC BALLAST	JUNO LIGHTING GROUP # C4V-126T-C400-CL
F / 55		•			277	2	26W QUAD 41K	•				6" APER. RECESSED COMPACT FLUORESCENT DOWNLIGHT WITH CLEAR REFLECTOR AND ELECTRONIC DIMMING BALLAST	JUNO LIGHTING GROUP # C6H-226Q-C650-CL-D7-277V
G / 28		•			277	1	26W TRT 41K	•				4" APER. RECESSED COMPACT FLUORESCENT DOWNLIGHT WITH CLEAR REFLECTOR AND ELECTRONIC DIMMING BALLAST	JUNO LIGHTING GROUP # CV4-126T-C400-CL-D7-277V
J / 295			•		277	1	250W MH PS			•		22.5" DIAMETER PENDANT MTD. ENCLOSED ACRYLIC PULSE START METAL HALIDE FIXTURE	GE LIGHTING SYSTEMS # C15-25-P-O-A-TA-2
K / 40	•				277	2	35W MR16 -	•				2'X2' RECESSED DUAL-LAMP EMERGENCY LIGHTING FIXTURE WITH EMERGENCY BATTERY UNIT AND SELF TEST DIAGNOSTICS	CHLORIDE # F2-W-AD
K1 / 15	•				277	2	20W MR16 -				•	DUAL-LAMP EMERGENCY LTG. FIXTURE WITH EMERGENCY BATTERY UNIT AND SELF TEST DIAGNOSTICS	CHLORIDE # S12-50N-H20-W-AD
L / 5				•	277	-	LED - -		•		•	LED TYPE EXIT LIGHT WITH EMERGENCY BATTERY UNIT & SELF-TEST DIAGNOSTICS	SIGNTEX LIGHTING # RPRBB1/2GW-TW-DG
DD / 61			•		277	1	50W MH -				•	12" X 12" EXTERIOR WALL MTD. CUT-OFF METAL HALIDE LUMINAIRE WITH ELECTRONIC BALLAST	FC LIGHTING # FCW1010-277V-50MH-E-BK
EE / 35		•			277	1	32W CFL -				•	ARM WALL MOUNTED COMPACT FLUORESCENT LUMINAIRE WITH STEP NECK DOME REFLECTOR AND PRISMATIC GLOBE AND ELECTRONIC BALLAST	FC LIGHTING # RLM-SN-18-277-32-E-BK-E5-PG100-DEC
FF / 469			•		277	1 1	400W HPS 250W QUARTZ				•	BUILDING WALL MOUNTED HIGH PRESSURE SODIUM FLOODLIGHT WITH TOP AND TWO SIDES VISOR	G.E. LIGHTING SYSTEMS # PF45-40-S-O-A-1-6X5-BLACK-Q-V-TSVAL-P4F053
GG / 86			•		277	1	70W MH ED17	•				6" APERTURE EXTERIOR RECESS. DOWNLIGHT W/ PRISMATIC GLASS LENS AND ELECTRONIC BALLAST	JUNO LIGHTING GROUP # M6-EDS-50E277-M600LC-C-L-PG
HH / 58			•		277	1	50W MH ED17	•				6" APERTURE EXTERIOR RECESS. DOWNLIGHT W/ PRISMATIC GLASS LENS AND ELECTRONIC BALLAST	JUNO LIGHTING GROUP # M6-EDS-70E-M600LC-C-L-PG
PP / 22		•			120	1	17W F17T8 -		•			2 FT. FLUORESCENT FIXTURE SURFACE MOUNTED INSIDE THE SWITCHBOARD HOUSING, WITH INSTANT START ELECTRONIC BALLAST. SEE SWITCHBOARD DETAIL ON SHEET EB-5.1.	LSI LIGHTING # EG4-1-17-SS010-UE
(ceiling fan symbol)					120	1	- - -					4-BLADE CEILING FAN, INSTALL PER MANUFACTURER'S SPECIFICATIONS	HUNTER # 23252 "THE BASEBALL FAN"

ELECTRICAL WIRING LEGEND

1/2"C - 2#12; 1/2"C - 3#12; 3/4"C - 4#12
3/4"C - 5#12; 1"C - 6#12; 1"C - 7#12
1/2"C - 2#10; 3/4"C - 3#10; 3/4"C - 4#10
1"C - 5#10; 3/4"C - 2#8; 1"C - 3#8
1"C - 4#8; 1"C - 2#6; 1"C - 3#6
1 1/4"C - 4#6; 1 1/4"C - 2#4

ISOLATED GROUND WIRE. RUN IN ADDITION TO REGULAR GROUND WIRE.

NOTES:

1. IN ADDITION TO PHASE AND NEUTRAL WIRES SHOWN ABOVE, ONE GROUND WIRE SHALL BE ADDED IN EACH CONDUIT RUN. GROUND WIRE SHALL BE SIZED PER C.E.C. BUT NOT SMALLER THAN #12.
2. CONDUIT SIZE SHALL BE AS SHOWN ABOVE UNLESS OTHERWISE NOTED ON THE PLANS.

FIRE ALARM SYSTEM NOTES

1. SUPPLY AND INSTALLATION OF A COMPLETE AND OPERATIONAL FIRE ALARM SYSTEM SHALL BE PART OF THE ELECTRICAL WORK. THE ELECTRICAL CONTRACTOR SHALL SUBMIT FIRE ALARM SHOP DRAWINGS TO THE CITY OR LOCAL FIRE MARSHALL FOR APPROVAL PRIOR TO INSTALLATION.
2. THE FIRE ALARM SYSTEM SHALL COMPLY WITH THE CALIFORNIA BUILDING CODE AND WITH THE REQUIREMENTS SET FORTH BY THE CALIFORNIA STATE FIRE MARSHALL OFFICE, NFPA #72, LOCAL PROTECTIVE SIGNALING SYSTEMS.
3. THE FIRE ALARM SYSTEM SHALL BE FULLY ADDRESSABLE.
4. THE FIRE ALARM CONTROL PANEL SHALL BE PROVIDED WITH AN AUTOMATIC TELEPHONE DIALER FOR NOTIFICATION TO LOCAL FIRE DEPARTMENT.
5. ALL FIRE ALARM WIRING SHALL BE IN CONDUIT.
6. ALL FIRE ALARM WIRING MUST BE TESTED FREE OF OPENS, SHORTS AND GROUNDS.
7. UPON COMPLETION OF SYSTEM INSTALLATION, THE SYSTEM SHALL BE TESTED IN THE PRESENCE OF AND IN A MANNER ACCEPTABLE TO THE ENFORCING AGENCY. ALL COSTS OF TESTING SHALL BE BORNE BY THE CONTRACTOR.
8. THE FIRE ALARM SYSTEM SHALL BE INSTALLED, TESTED AND CERTIFIED BY FACTORY AUTHORIZED AND CERTIFIED REPRESENTATIVE.

FIRE ALARM SYSTEM LEGEND

- FAA — FIRE ALARM ANNUNCIATOR
- FIRE ALARM MANUAL PULL STATION, MOUNT AT +48"
- PHOTOELECTRIC SMOKE DETECTOR, CEILING MOUNTED
- SD — DUCT TYPE SMOKE DETECTOR
- FIRE ALARM HORN, WEATHERPROOF, MOUNT AT +90" AFF
- FIRE ALARM STROBE LIGHT. MOUNT AT +80" AFF OR 6" BELOW CEILING, WHICHEVER IS LOWER
- COMBINATION HORN/STROBE LIGHT. MOUNT AT +80" AFF OR 6" BELOW CEILING, WHICHEVER IS LOWER

TELEPHONE AND DATA LEGEND

- TELEPHONE OUTLET, FLUSH WALL MOUNTED AT +18" OR AS NOTED PROVIDE 3/4" C.O. TO TELEPHONE/SIGNAL BACKBOARD
- DATA OUTLET, FLUSH WALL MOUNTED AT +18" OR AS NOTED PROVIDE 3/4" C.O. TO TELEPHONE/SIGNAL BACKBOARD
- COMBINATION DATA/TELEPHONE OUTLET FLUSH WALL MOUNTED AT +18" OR AS NOTED. PROVIDE 3/4" C.O. TO TELEPHONE/SIGNAL BACKBOARD

SECURITY SYSTEM LEGEND

- INTRUSION DETECTION DOOR SWITCH, CONCEALED IN DOOR FRAME, ROLLER BALL TYPE UNLESS NOTED OTHERWISE
- PASSIVE INFRARED MOTION DETECTOR
- EXTERNAL PASSIVE INFRARED MOTION DETECTOR
- DIGITAL KEY PAD FOR SECURITY SYSTEM, MOUNT AT +48 INCHES FROM FIN. FLOOR TO CENTER
- SECURITY SYSTEM SIREN
- —SI— SECURITY SYSTEM CONDUIT, 3/4" C WITH SECURITY CABLES OR AS NOTED ON DRAWINGS

PUBLIC ADDRESS/PAGING SYSTEM LEGEND

- RECESSED CEILING MOUNTED SPEAKER
- HORN SPEAKER
- MICROPHONE OUTLET
- —S— PUBLIC ADDRESS SYSTEM CONDUIT, "S" INDICATES 3/4"C WITH 1-2/C #16
- —2S— SPEAKER CABLE, "2S" INDICATES 3/4"C WITH 2 - 2/C #16 SPEAKER CABLES

CCTV AND CATV SYSTEM LEGENDS

- CCTV CAMERA
- MONITOR
- CABLE TELEVISION OUTLET, WALL MOUNTED
- CABLE TELEVISION OUTLET, CEILING MOUNTED

ELECTRICAL SYMBOL LIST

- FLUORESCENT LIGHTING FIXTURE, RECESSED IN CEILING
- FLUORESCENT LIGHTING FIXTURE WITH CIRCLE INDICATES EMERGENCY BATTERY UNIT
- FLUORESCENT LIGHTING FIXTURE, SURFACE OR PENDANT MOUNTED
- FLUORESCENT LIGHTING FIXTURE, WALL MOUNTED
- FLUORESCENT STRIP LIGHTING FIXTURE
- INCANDESCENT, COMPACT FLUORESCENT OR H.I.D. LIGHTING FIXTURE, SURFACE OR PENDANT MOUNTED
- INCANDESCENT, COMPACT FLUORESCENT OR H.I.D. LIGHTING FIXTURE, RECESSED MOUNTED
- INCANDESCENT, COMPACT FLUORESCENT OR H.I.D. LIGHTING FIXTURE, WALL MOUNTED
- INCANDESCENT LIGHTING FIXTURE, PENDANT MOUNTED
- H.I.D. FLOODLIGHT, WALL MOUNTED
- EXIT SIGN LIGHTING FIXTURE
- EXIT SIGN LIGHTING FIXTURE, DIRECTIONAL ARROW AS SHOWN
- EMERGENCY LIGHTING FIXTURE, WALL MOUNTED
- EMERGENCY LIGHTING FIXTURE, RECESSED IN CEILING
- CEILING FAN, SEE LIGHTING FIXTURE SCHEDULE ON THIS SHEET
- DUPLEX RECEPTACLE MOUNTED AT +18" OR AS NOTED, GROUNDING TYPE
- FLOOR MOUNTED DUPLEX RECEPTACLE, GROUNDING TYPE
- GROUND FAULT CIRCUIT INTERRUPTER (GFCI) TYPE DUPLEX RECEPTACLE MOUNTED AT +18" OR AS NOTED, GROUNDING TYPE
- G — ANY RECEPTACLE WITH "G" SHALL BE ISOLATED GROUND TYPE
- DOUBLE DUPLEX RECEPTACLE MOUNTED AT +18" OR AS NOTED, GROUNDING TYPE
- SPECIAL PURPOSE RECEPTACLE AS INDICATED ON PLAN
- JUNCTION BOX, WALL MOUNTED
- JUNCTION BOX, CEILING MOUNTED
- EXHAUST FAN
- MOTOR
- $ — TOGGLE SWITCH, SINGLE POLE, FLUSH MOUNTED AT +48" OR AS NOTED
- $3 — THREE-WAY TOGGLE SWITCH, FLUSH MOUNTED AT +48" OR AS NOTED
- $M — MANUAL MOTOR STARTER SWITCH WITH THERMAL OVERLOAD PROTECTION, 1 OR 2 POLE AS REQUIRED, MOUNTED AT +48" OR AS NOTED
- $K — KEYED SWITCH, SINGLE POLE, FLUSH MOUNTED AT +48" OR AS NOTED
- $F — CEILING FAN SWITCH
- S — WALL MOUNTED OCCUPANCY SENSOR, SINGLE CIRCUIT, MOUNT AT +48" WATT STOPPER #PW-100 OR EQUAL
- Sa,b — WALL MOUNTED OCCUPANCY SENSOR, TWO CIRCUITS, MOUNT AT +48" WATT STOPPER #PW-200 OR EQUAL
- OS — CEILING MOUNTED OCCUPANCY SENSOR COMPLETE WITH AUXILIARY RELAYS, POWER PACKS AND CONNECTORS, WATT STOPPER #DT-300 OR EQUAL. POWER PACKS SHALL BE FULLY RATED AT 20 AMPS.
- D — COMPACT FLUORESCENT DIMMER SWITCH, FLUSH MOUNTED AT +48" OR AS NOTED HUNT #PS-010-277V
- LV — LOW VOLTAGE SWITCH, FLUSH MOUNTED AT +48" OR AS NOTED
- LVK — KEYED LOW VOLTAGE SWITCH, FLUSH MOUNTED AT +48" OR AS NOTED
- E — EXHAUST FAN CONTROLLED BY LIGHT SWITCH
- T — TIMER
- T — THERMOSTAT OUTLET, FLUSH MOUNTED AT +48" OR AS NOTED. PROVIDE 1/2" C.O. TO CORRESPONDING H.V.A.C. UNIT.
- F — DISCONNECT SWITCH, HORSEPOWER RATED, HEAVY DUTY. "F" DENOTES FUSED TYPE.
- MAGNETIC MOTOR STARTER
- LIGHTING OR RECEPTACLE PANELBOARD @ +6'-6" TO TOP
- TELEPHONE/DATA TERMINAL BACKBOARD
- A-1,3 — HOMERUN TO PANEL "A", CIRCUITS #1 & #3 WITH WIRES AS NOTED
- A / 83 — FIXTURE DESIGNATION, "A" = FIXTURE TYPE, 46 = TOTAL WATTS
- 2 — INDICATES PLAN NOTE #2
- CONDUIT RUN CONCEALED ABOVE CEILING OR IN WALL
- CONDUIT RUN CONCEALED IN OR BELOW FLOOR OR GRADE
- FLEXIBLE CONDUIT
- WP — INDICATES WEATHERPROOF
- C.O. — INDICATES CONDUIT ONLY
- GFI — INDICATES GROUND FAULT INTERRUPTER
- A.F.G. — INDICATES ABOVE FINISHED GRADE
- A.F.F. — INDICATES ABOVE FINISHED FLOOR
- U.N.O. — UNLESS NOTED OTHERWISE

NOTE: NOT ALL SYMBOLS AND ABBREVIATIONS MAY BE USED.

ELECTRICAL SHEET INDEX

SHEET NO.	DESCRIPTION
EB-0.1	ELECTRICAL SYMBOL LIST AND LIGHTING FIXTURE SCHEDULE
EB-0.2	ELECTRICAL GENERAL NOTES
EB-0.3	PANELBOARD SCHEDULES AND SINGLE LINE DIAGRAM
EB-0.4	PANELBOARD SCHEDULES
EB-2.1	STADIUM CLUB LIGHTING PLAN
EB-2.2	STADIUM CLUB POWER PLAN
EB-2.3	STADIUM CLUB SIGNAL PLAN
EB-2.4	STADIUM CLUB TITLE 24 LIGHTING CALCULATIONS
EB-3.1	ADMINISTRATION BUILDING LIGHTING PLAN
EB-3.2	ADMINISTRATION BUILDING POWER PLAN
EB-3.3	ADMINISTRATION BUILDING SIGNAL PLAN
EB-3.4	ADMINISTRATION BUILDING TITLE 24 LIGHTING CALCULATIONS
EB-4.1	CONCESSION BUILDING LIGHTING AND POWER PLANS
EB-4.2	CONCESSION BUILDING SIGNAL PLAN
EB-4.3	CONCESSION BUILDING TITLE 24 LIGHTING CALCULATIONS
EB-5.1	MAINTENANCE BUILDING LIGHTING AND POWER PLANS
EB-5.2	MAINTENANCE BUILDING SIGNAL PLAN
EB-5.3	MAINTENANCE BUILDING TITLE 24 LIGHTING CALCULATIONS

M I G
MOORE IACOFANO GOLTSMAN, INC.
801 N. HARBOR BLVD. FULLERTON, CA 92831
TEL 714/871-3638 FAX 714/871-1188 www.migcom.com

PITASSI ARCHITECTS, INC.
8439 White Oak Ave., Suite. 105
Rancho Cucamonga, Ca 91730
Tel. 909-980-1361 ▫ Fax. 909-944-5814
e-mail. pjpaia@pitassiarchitects.com

CONSULTANT:

LRA ENGINEERS
Electrical Consulting Engineers
1471 Pomona Road, Unit E
Corona, California 92880
Tel: (951) 737-4569 Fax: (951) 737-5619

PERRIS VALLEY Big League Dreams

2155 Trumble Road
Perris, California 92570

SHEET TITLE
ELECTRICAL SYMBOL LIST AND LIGHTING FIXTURE SCHED.

100% CONSTRUCTION DOCUMENT

DATE	REVISIONS

STAMP

REGISTERED PROFESSIONAL ENGINEER CIRILO C. REGALADO JR. No. E16914 Exp. 6-30-11 ELECTRICAL STATE OF CALIFORNIA

CHECKED BY	DATE
LRA	

DATE	FILE NAME
01-07-10	

DRAWN BY: CR
JOB NO.: 05208.00
SCALE: NONE
SHEET: EB-0.1
161 OF 313 SHEETS